Furniture

Technical Data Information

Product Code: **LOT60FG**

Product Discription: **600 Floor Standing 2-drawer unit grey**

Overall Dimensions: **H: 800** **W: 596** **D: 445** **L:**

Additional Information:

Country of Origin:	China
Fitting Instruction:	No
CE Certification:	No
Product Material:	
Colour/Finish:	Satin Grey
Construction Method:	Cam & Wood Dowel
Construction Type:	Rigid
Fascia Thickness:	18
Cabinet Thickness:	18
Drawer Included:	Yes
Fixing Included:	Yes
Waste Shroud:	Yes
Handle Type:	Inset

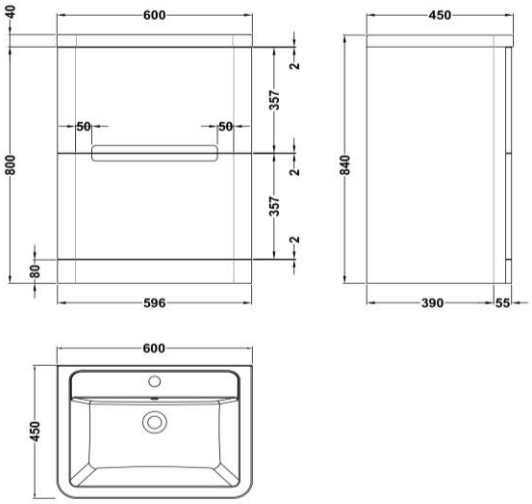

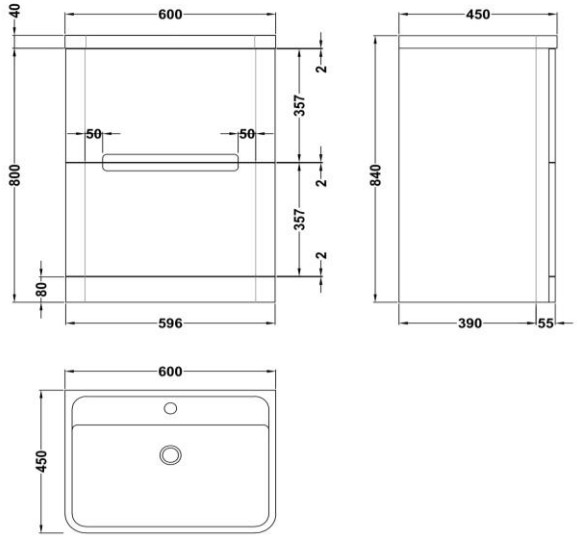

All Dimensions are in millimetres. The information contained on this page was correct at date of issue. Fitting dimensions are provided as a guide only. Some variation may occur due to manufacturing tolerances. We pursue a policy of continuing improvement in design and performance of our products and so reserve the right to change specifications without prior notice.