R.T. LARGE

ESTABLISHED 1969

TECHNICAL DATASHEET

JUPITER DOUBLE DESIGNER RADIATOR

Product Code	J1851800WH	**Barcode**	5391534558620
Finish	WHITE	**Ral No**	9016
Product Type	DESIGNER RADIATOR		
Btu/hr output	3605 at 60 C		

Guarantee & Aftercare

During installation extra care must be taken to avoid damaging the fittings.We provide a 10 year guarantee against faulty workmanship or materials (excluding serviceable parts), providing they have been installed,cared for and used in accordance with our instructions.

Watts	1057
Pipe centres	275mm
Wall to pipe centres	75mm
Max height	1800mm
Max width	185mm

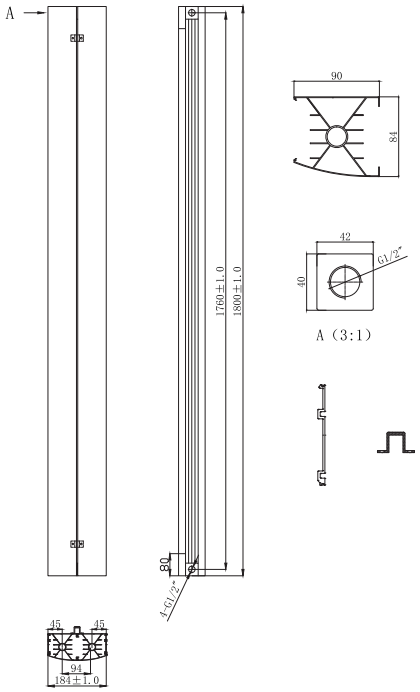

CUSTOMER CARE:

For further information please call +353(0)1 450 4307

RT Large & Son Ltd,Unit 2 Bluebell Industrial Estate,Dublin 12,D12 K078
Telephone:+353(0)1 450 4307 Fax:+353(0)1 450 43045 Web site:www.rtlarge.ie Email:sales@rtlarge.ie